arXiv:quant-ph/0503096v2 28 Mar 2005

On multiparticle W states, their implementations and applications in quantum information problems

V.N. Gorbachev, A.I. Trubilko
Laboratory for quantum information & computation, University of AeroSpase Instrumentation, St-Petersburg, 190000, Bolshaia Morskaia 67, Russia.

Large number of multimode entangled states of light generated in down conversion processes belongs to a collection which is natural generalization of the W class. A brief overview of these states, schemes for their preparation, experimental implementations and possible applications are presented.

PACS numbers: 03.67.Mn

I. INTRODUCTION

Entangled states have been generated in many experiments and their applications in quantum communications have been demonstrated (see for example [1]). Now great efforts are concentrated on investigation of multiparticle entanglement with its promising features which are interesting in decoherence-free quantum informational processing, advanced multiparty quantum communications and others.

When considering implementation of the multiparticle entangled states (MES), one finds that most of them have been generated in optics experiments. In a typical optical scheme photons of the source are distributed to output modes by linear lossless elements. If the configuration is symmetric and a photon enters input, then it can be found on any of the outputs. By this way the multimode light is achieved, its state belongs to the W-class introduced by Cirac et al [2]. Varying configuration of the scheme as well as using the source of polarized photons a more extensive collection of MES than W-class arises. Particularly it includes the Dicke states and can be studied from point of view of quantum information theory (QIT) without referring to any physical system. Analysis of common features gives us an answer how to manipulate MES in optimal way and which of informational tasks can be done using a given entangled state. In respect to physics MES are natural states of the multiparticle systems. So if any m particles of a large ensemble can be excited then all possibilities result in the considered MES. Indeed entangled states of two macroscopic atomic ensembles have been demonstrated experimentally by Polzik et al [3].

It is important to know the common features of MES because it determines how to detect them in experiment. In QIT there is a set of criteria of entanglement which require the knowledge of the state or its entropy also Bell inequalities are often discussed. But exploiting such criteria in experiment is a hard problem. However there are specific witness observables which expectation values indicate entanglement. Experimental implementation of the witness observable for polarized light have been demonstrated by Weinfurter et all [4]. The estimation of an unknown state can be made by quantum tomography. Indeed this method has been used by Roos et all [5] in experiment with trapped ions. Another way is measuring a such operator which eigenvector is the desired entangled state. Then its eigenvalue and variance indicate entanglement. In fact some members of the W-class are reduced to the Dicke states which are eigenvectors of two collective operators J^2 and J_3 [6]. In optics implementation the spin variables can be associated with polarization of light and one can measure, for example, variances of these operators which describe noise of light. For eigenvectors these variances are equal to zero and it means that there is no noise. More precisely in such measurement the shot noise of light is suppressed bellow standard quantum limit given by the coherent state.

Quantum correlations are fragile and easily destroyed with environment nevertheless several MES have immunity to decoherence and they are robust to loss of particles. These features are attractive for quantum communications, but their exploiting is a hard problem. For example, many attempts have been made to introduce W state instead of the EPR pair in the standard teleportation protocol proposed by Bennett et al [7]. But most of these proposals results in conditional teleportation, when the task is accomplished with a probability. However several of the W-states can be suitable as a quantum channel for dense coding and the unconditional teleportation of entangled states also for the problem of secrete sharing and other tasks.

The main aim of this work is to consider properties, implementations and applications of the collection of MES, which are simple generalization of the W class. For a particular case of three-particle GHZ and W states transformations between them, three-party quantum communications protocols for secrete sharing and splitting of quantum information with GHZ have been discussed by Karlsson et al [8]. In our work using the standard approaches of QIT we pay attention to physical features of MES.

This paper is organized as follows. First we describe tree-particle W state, which is non-equivalent to GHZ and robust to loss of particle. Then more general states are introduced and their connection with the Dicke states together with their properties, measures of entanglement and witness observables are considered. Next we examine several proposals for generating MES of atoms and light and overview experimental implementations of the three and four photon W states. Finally several protocols are discussed.

II. PROPERTIES

A. Three-qubit GHZ and W states

1. *Classification of states in LOCC.*

There are strong definitions for the three-particle W states introduced by Cirac et al [2]. These definitions are based on a set of transformations known as LOCC (Local Operations and Quantum Communication). We will use a simple notation, that operators are local if $U|\varphi\rangle_{AB} = A \otimes B|\varphi\rangle_{AB}$, where operator A acts on the particle A and don't affect to B and so on. Following this point one finds, that the two-mode hamiltonian described a parametric down conversion source (PDC) $H = ik\hbar(a^\dagger b^\dagger - ab)$ is an example of non-local operator. PDC generates entangled states but they can't be created by LOCC. This is a general property of entanglement.
How to compare one state with another? From physical reasons the answer is clear. If a physical system is prepared in different states, then by measuring of observables, one can distinct them in principle. In QIT, which operates the logical states without referring to any particular physical system, two states are identical, if they can be obtained from each other with certainty by LOCC. Particularly, it means, that parties can use these two states for the same task [9].
In this approach there are two classes of irreducible tripartite entanglement, namely either GHZ states [10]

$$|GHZ\rangle = 1/\sqrt{2}(|000\rangle + |111\rangle), \tag{1}$$

and

$$|W\rangle = 1/\sqrt{3}(|100\rangle + |010\rangle + |001\rangle), \tag{2}$$

known as W-state in QIT. Here $|0\rangle, |1\rangle$ are states of a two-level system, or qubit (quantum bit). One finds, that $|GHZ\rangle$ can't be converted into $|W\rangle$ by LOCC, but they are entangled because of their wave functions are not factorized into product of three particles. For general case the W-class introduced by Cirac has the form $\varphi_W = a|000\rangle + b|100\rangle + c|010\rangle + d|001\rangle$, where $a^2 + b^2 + c^2 + d^2 = 1$.

2. *Robustness*

Some differences between $|GHZ\rangle$ and $|W\rangle$ are clear without LOCC.
Consider any two of three particles, say 1 and 2, which density matrix is $\rho(12) = Tr_3\rho(123)$. If one of the particles is traced out, in QIT it means a loss of particle. In fact three parties share particles 1,2 and 3 in entangled state and one of them decides not to cooperate with other two. Can the remainder two parties accomplish the task? Answer depends on the robustness of the state. For GHZ

$$\rho_{GHZ}(12) = 1/2(|00\rangle\langle 00| + |11\rangle\langle 11|), \tag{3}$$

for W

$$\rho_W(12) = 1/3|00\rangle\langle 00| + 2/3|\Psi^\dagger\rangle\langle\Psi^\dagger|, \tag{4}$$

where $\Psi^\dagger = 1/\sqrt{2}(|01\rangle + |10\rangle)$. The main difference is that the density matrix $\rho_W(12)$ has non-diagonal elements or coherence $|01\rangle\langle 10|$. This is a reason of entanglement of $\rho_W(12)$ in contrast to $\rho_{GHZ}(12)$.
In more detail. To analyze the mixed states it needs to introduce criteria of inseparability, that are generalizations of the non-factorizability of the wave function. A criterion of Werner [11] tells, that state is separable or classically correlated or non-entangled if its density matrix has the form

$$\rho(12) = \sum_k \lambda_k \rho(1)_k \otimes \rho_k(2), \tag{5}$$

where $\sum_k \lambda_k = 1$ and all $\lambda_k \in [0,1]$. Then one finds that $\rho_{GHZ}(12)$ is classically correlated. Next criterion is necessary and sufficient to establish inseparability of $\rho_W(12)$. It tells, that the state which dimension of Hilbert space is 2×2 or 2×3 is inseparable, if any of eigenvalues of the partially transposed density matrix is negative [12], [13]. The partially transposed density matrix, say over particle 1, reads $\rho^{T_1}(12)_W = 1/3|00\rangle\langle 00| + 2/3(|01\rangle\langle 01| + |10\rangle\langle 10| + |11\rangle\langle 00| + |00\rangle\langle 11|)$, it has a negative eigenvalue, then $\rho_W(12)$ is inseparable or entangled. In this case quantum correlations between the remainder two particles survive after tracing and this is robustness to particle loss.

B. Several generalizations

1. *Multiparticle W, ZSA and other states*

A simple generalizations is possible by introducing the n particle states of the form

$$\eta_n(1) = q_1|10,\ldots,0\rangle + q_2|01,\ldots,0\rangle + \cdots + q_n|00,\ldots,1\rangle), \tag{6}$$

where $\sum_k |q_k|^2 = 1$. In particular case

$$q_1 + \ldots q_n = 0, \tag{7}$$

one finds the zero sum amplitude (ZSA) states introduced by Pati [14]. They are not equivalent to GHZ under LOCC. If all coefficients in $\eta_n(1)$ are equal there is a totally symmetric wave function

$$W_n = 1/\sqrt{n}(|10,\ldots,0\rangle + |01,\ldots,0\rangle + \cdots + |00,\ldots,1\rangle), \tag{8}$$

that is known in QIT as multiparticle W-states [2]. Such symmetric vector describes an ensemble of two-level physical systems, qubits, where only $m = 1$ particle from n is excited. When $m \geq 1$ the symmetrized states has the form

$$|m;n\rangle = 1/Q \sum_z P_z|\underbrace{1,\ldots 1}_{m},\underbrace{0,\ldots,0}_{n-m}\rangle, \tag{9}$$

where P_z is one from $C_m^n = n!/(m!(n-m)!)$ distinguishable permutations of particles, $Q = \sqrt{C_m^n}$. All states in the superposition (9) have equal weight Q, when their weights are different the more general η_{mn} states may be found, which are a natural generalization of the W-class. The introduced collection of η_{mn} contains W, ZSA and symmetric states $|m;n\rangle$.

These states seem to be natural for multiparticle systems and can be generated in many physical processes. When considering problem of interaction between atoms and light, for example, the collective atomic operators are introduced. For two-level identical atoms they read

$$S_{xy} = \sum_a |x\rangle_a\langle y|, \tag{10}$$

where $|x\rangle_a\langle y|, x, y = 0, 1$ is operator of a single atom a and 0,1 label lower and upper level. There is a representation for $|m;n\rangle$

$$S_{10}^m|0,\ldots,0\rangle = m!Q|m;n\rangle. \tag{11}$$

It tells, that any symmetric states $|n;m\rangle$, particulary W ones, can be produced in any process of collective interaction between atoms and light or other system. There is a simple physical reason for it. When each of $m \leq n$ identical atoms absorb a photon, then all possibilities results in superposition $|m;n\rangle$, when atoms are distinguished more general state η_{nm} arises.

2. *Connection with Dicke states*

Some members of the W class can be reduced to the Dicke states. Let introduce collective operators $J_k, k = 1, 2, 3$ and $J^2 = J_1^2 + J_2^2 + J_3^2$, that obey the commutation relations of the momentum operators

$$[J_j; J_k] = i\epsilon_{jkl}J_l. \tag{12}$$

The Dicke states are defined as eigenvectors of two operators J^2 and J_3 [6]

$$J^2|jl\rangle = j(j+1)|jl\rangle, \quad J_3|jl\rangle = l|jl\rangle, \tag{13}$$

where $|l| \leq j$, $\max j = n/2$, n is number of the particles and $l = [(n-m)-m)]/2$ is difference between the numbers of non-excited and excited particles. Using (10), we have a representation

$$J_1 = (S_{10} + S_{01})/2, \quad J_2 = i(S_{10} - S_{01})/2, \quad J_3 = (S_{00} - S_{11})/2. \tag{14}$$

Note, that in (14) the vectors $|0\rangle, |1\rangle$ however can be considered as the Fock state of light.
All symmetric states have the form $|j = n/2, l\rangle$ and

$$W_n = |j = n/2,\ l = n/2 - 1\rangle. \tag{15}$$

For ZSA states

$$\eta_n = |j = n/2 - 1,\ l = n/2 - 1\rangle. \tag{16}$$

As result W and ZSA are eigenvectors of J^2 and J_3 and belong to family of the Dicke states.

3. Symmetry and Decoherence-Free states

When the symmetry of state is conserved in a physical processes one finds, for example, that the antisymmetric two-particle wave function $\Psi^- = (1/\sqrt{2})(|01\rangle - |10\rangle)$ can't be transformed into product $|00\rangle$. Such entanglement is therefore decoherence-free (DF). A state is DF if it is invariant under some unitary transformation, described an collective interaction with noisy environment. It is interesting for protection of information by the noiseless quantum code, that has been considered by Zanardi et al [15].
Let Ψ^- be the state of two atoms, which interact with its thermostat, then

$$S_{01}\Psi^- = 0. \tag{17}$$

Formally Ψ^- looks as a vacuum and has immunity to the spontaneous decay. This state can be storage in a collective thermostat which has been considered by Basharov [16]. It is described by equation of the Lindblad form

$$\dot{\rho} = -\gamma[R^\dagger R\rho - R\rho R^\dagger + h.c.], \tag{18}$$

where γ is a decay rate and $R = S_{01}$ is a collective operator.
To preserve entanglement, in QIT a class of DF states has been introduced [17], [15], [18], [19]. For two particles there is only one DF state Ψ^-. In the case of four particles there are two DF states, which are interesting for applications. They are a product of singlets Ψ^-

$$\Phi_0 = |\Psi^-\rangle|\Psi^-\rangle \tag{19}$$

and an orthogonal to Φ_0 vector, introduced by Kempe [19]

$$\Psi_1 = (1/\sqrt{3})(|0011\rangle + |1100\rangle - |\Psi^+\rangle|\Psi^+\rangle). \tag{20}$$

To protect quantum information, the logical qubit $\alpha|0\rangle + \beta|1\rangle$ can be encoded in to superposition $\alpha\Psi_0 + \beta\Psi_1$, which is DF state and immune against noise. These two DF states have been generated experimentally by Weifurter et al [20] to demonstrate DF quantum information processing.
Several examples of DF states of physical systems can be introduced by a simple generalization of (17). Consider $\eta_n(1)$, where logical qubits are implemented by two-level atoms or by modes of light in the Fock state with 0 and 1 photon. Next observation is true. There is a collective operator R, for which

$$R\eta_n = \sum_k q_k|0\rangle. \tag{21}$$

It can be chosen in the form $R = S_{10}$ or $R = \sum_k a_k$, where a_k is annihilation operator of the light mode k. If $\sum_k q_k = 0$, one finds ZSA states, which are robust to Decoherence like Ψ^-. So that either atomic ensemble or light is prepared in ZSA state it may conserve its quantum correlations under a collective noisy environment.

C. Entanglement of multiparticle W states

1. Entanglement and its measures

Entanglement of multiparticle system can depend from the number of particles. The reason is that if single excitation is distributed into a large number of particles then total state is closer to unexcited or vacuum state.
In more detail. Introducing a density matrix of n particles $\rho(n) = |W_n\rangle\langle W_n|$ and considering a state of any $s \leq n$ particles we have

$$\rho(s \leq n) = (s/n)|W_s\rangle\langle W_s| + (1 - s/n)|0\rangle\langle 0|. \tag{22}$$

For $s = 2$ the Peres-Horodecki inseparability criterion can be applied. The eigenvalues of the partially transposed density matrix are $\lambda = \{1/n; 1/n; (n-2)[1 \pm \sqrt{1 + 4/(n-2)^2}]/2n$, where one of them is negative. Thus the state is inseparable or entangled. However in the limit of $n \to \infty$ entanglement vanishes: $\lambda = \{0; 0; 0; 1\}$, that is in agreement with (22), from which it follows, that $\rho(s \leq n) \approx |0\rangle\langle 0|$.
The problem whether a given multiparticle state is entangled is hard because of the calculation difficulty increases exponentially with number of particles. There is no necessary and sufficient operational criterion and various measures of entanglement are used. Several common measures are entanglement entropy, entanglement formation and negativity. Entanglement entropy $E(|\Psi\rangle_{AB})$ of a pure state and a partition for the system A, B is defined as $E(|\Psi\rangle_{AB}) = S(\rho_A) = S(\rho_B)$, where $S(\rho) = -Tr(\rho \log \rho)$ is von Neuman entropy and $\rho_A = Tr_B|\Psi_{AB}\rangle\langle\Psi_{AB}|$ is the reduced density matrix. For product states entanglement entropy is zero. It has its maximum $\log dim(A)$, given for a partition with dimension $dim(A) = d_A, dim(B) = d_B$ and $d_A < d_B$. A state that achieves this maximum is maximally entangled: $\Psi_{AB} = 1/\sqrt{d_A}(|0,0\rangle + |1,1\rangle + \cdots + |d_A - 1, d_A - 1\rangle)_{AB}$. For EPR pair of the form $|\varphi\rangle = \alpha|00\rangle + \beta|11\rangle$ we have $E(|\varphi\rangle) = H(p)$, where $H(p) = -p \log p - (1-p)\log(1-p)$ is a function of entropy, well known in the theory of information, $p = |\alpha|^2 = 1 - |\beta|^2$. If $p = 1/2$ the function $H(p)$ has its maximum corresponding to maximal entanglement. Using the presented definition the entanglement entropy of the W-state obtained from (22) has the form of $H(p)$:

$$E(|W_n\rangle) = -(s/n)\log(s/n) - (1 - s/n)\log(1 - s/n), \tag{23}$$

where A and B are subsystems of s and $n - s$ particles. If $s = n/2$, then A and B have the same number of particles and their entanglement achieves maximum.
Entanglement of formation is reduced to entanglement entropy for pure states and defined as $E_F(\rho_{AB}) = \min_{\{p_i|\psi_i\rangle_{AB}\}} \sum_i p_i E(|\psi_i\rangle_{AB})$, where $\rho_{AB} = \sum_i p_i|\psi_i\rangle\langle\psi_i|$.
The logarithmic negativity is defined as the absolute sum of the negative eigenvalues of the partial transpose with respect to A of density matrix ρ_{AB}. So $N(\rho_{AB}) = \sum_i(|\lambda_i| - \lambda_i)/2$. Negativity may also disagree with other measures for the so-called positive partial transposed entangled states, which negativity is zero. It demonstrates, that to analyze multiparticle entanglement it needs various measures and criteria.
There is a criterion, that can be interesting from the experimental point of view. It is based on single-particle measurement. The persistency of entanglement is defined as the minimum number of single-particle measurements M such that, for all measurement outcomes, the state is completely disentangled (separable) [21]. Let $|0\rangle, |1\rangle$ be a basis of the measurement. Then for GHZ $M = 1$, but for W_n it needs $M = n - 1$ measurements to obtain a separable state.

2. Witness

In practice exploiting of the above measures is a hard problem and any recipes adjusted to observables seem to be more appropriate.
To detect various forms of multipatite correlations witness have been introduced [13], [22]. A witness of n- particle entanglement is an observable, which value on state with $n - 1$ partite entanglement is positive and negative on some n-partite entangled state.
A witness operator for the three-particle W state reads

$$W_W^{(1)} = 2/3 - |W\rangle\langle W|. \tag{24}$$

In accordance with definition $Tr[W_W^{(1)}|W\rangle\langle W|] = -1/3$ and $Tr[W_W^{(1)}\rho_W(12)] = 1/9$, where two particle density matrix $\rho_W(12)$ is given by (4). This witness has positive expectation value on biseparable and fully separable states. Then it detects all tripartite entangled states of W and GHZ classes, which can be distinguished by the second witness

operator

$$W_W^{(2)} = 1/2 - |GHZ'\rangle\langle GHZ'|, \tag{25}$$

where $|GHZ'\rangle$ is obtained from $|GHZ\rangle$ by replacing $|x\rangle \to ((-1)^x|0\rangle + i|1\rangle)/\sqrt{2}$, $x = 0, 1$.
These witnesses can be observed in experiment. Using the Pauli matrixes one finds

$$W_W^{(1)} = 1/24[17 + 7\sigma_z^{\otimes 3} + 3(\sigma_z \otimes 1 \otimes 1 + 1 \otimes \sigma_z \otimes 1 + 1 \otimes 1 \otimes \sigma_z) + 5(\sigma_z^{\otimes 2} \otimes 1 + \sigma_z \otimes 1 \otimes \sigma_z + 1 \otimes \sigma_z^{\otimes 2})$$
$$-(1 + \sigma_z + \sigma_x)^{\otimes 3} - (1 + \sigma_z - \sigma_x)^{\otimes 3} - (1 + \sigma_z + \sigma_y)^{\otimes 3} - (1 + \sigma_z - \sigma_y)^{\otimes 3}].$$

In optics implementations two qubit states can be presented by the polarization of the photons with horizontal H and vertical V linear polarization. Then it needs a set of polarization analyzers to measure the witness operators [23]. Being non-universal measure, witnesses provide the sufficient criteria.
Another way of testing the W entanglement is to measure the operators J^2 and J_3 whose eigenvectors are W and ZSA states. In the representation given by (14) the spin variables can be associated with the H and V polarized photons. Then by measuring the polarization of photons one can get the expectation values of J^2 and J_3, whose variances are zero for W and ZSA states. These expectation values and its variances indicate the entanglement.

III. SCHEMES FOR GENERATION.

A. Atomic systems

1. Schemes

There are several proposals on generating of W states in Cavity Quantum Electrodynamics (QED) and Raman interaction between three-level atoms and the high-Q cavity modes. These models seem to be attractive but they often neglect all relaxations processes that is a hard problem in its implementation. Some principal features can be demonstrated by considering a more simple model of two-level atoms in free space.
Interaction between an ensemble of two-level atoms and light can be described by the usual Hamiltonian

$$H = i\hbar(S_{10}B - S_{01}B^\dagger), \tag{26}$$

where B is a field operator. This Hamiltonian allows to examine various processes of the one-photon interaction, for which $B = ga$, Raman type scattering of two modes a and b, when $B = fa^\dagger b$, where g, f are coupling constants. In the model given by (26) there are some physical reasons, that result in W states. Without relaxation one finds integral of motion conserving the total number of excitations m. For example, if all atoms are in their ground states and light in the Fock state with one photon only, then $m = 1$. In the case of one-photon interaction the integral has the form $I = a^\dagger a - (1/2)[S_{00} - S_{11}]$. Then during evolution atoms and light exchange the excitation. As result m is distributed into atomic ensemble or into the light modes and the symmetric Dicke states $|m, n\rangle$ particularly W_n states of either atoms or modes are generated.
Generally the multiparticle model given by (26) is not integrable. But for particular cases simple exact solutions can be found. The reason is that in the symmetry-preserving interaction only a part of states from the total Hilbert space is involved in evolution. Then one can get simple analytic solutions, if the problem includes a small number of m. In the case of Raman type interaction we have [24]

$$(\alpha|01\rangle + \beta|10\rangle)_{ab} \otimes |m; n\rangle \to$$
$$\alpha\{\cos\theta_m|01\rangle \otimes |m; n\rangle + \sin\theta_m|10\rangle \otimes |m+1; n\rangle\}$$
$$+\beta\{-\sin\theta'_m|01\rangle \otimes |m-1; n\rangle + \cos\theta'_m|10\rangle \otimes |m; n\rangle\}, \tag{27}$$

where $|\alpha|^2 + |\beta|^2 = 1$, $\theta_m = tf\sqrt{(m+1)(n-m)}$, $\theta'_m = \theta_{m-1}$. This example shows evolution of the totally symmetric initial state of atoms $|m; n\rangle$ and entangled state $\alpha|01\rangle + \beta|10\rangle$ of two modes. Equation (27) describes the next processes: 1/ generation of atomic W entanglement $|0; n\rangle \to |1; n\rangle = W_n$, 2/ transformation of the symmetric states $|m; n\rangle \to |m \pm 1; n\rangle$, 3/ entanglement swapping, when the light state is transformed into atoms and back.
Preparation of the W and GHZ atomic states in Raman type interaction has been considered by Agarwal et al [25]. In this work the numerical analyze of the analytic solutions has been presented.
If an excited atom interacts with three or more cavity modes, it can emits a photon into one of them, then the W state of light may be achieved [26].

Measurement is another way for preparation of a physical system in a given state, but it can be done with some probability. If atoms interact with cavity modes, then by detecting an output photon the atomic W and Dicke states may be achieved [27].
Interaction between atoms and light can produce entanglement between them. Such systems are useful for preparing entangled state of atomic ensembles, when a projective measurement on photons is performed. By this way W states of atomic ensembles can be achieved [28], they have a hierarchic organization being consisting of ensembles each of which is in the W state.
Indeed the Heisenberg model was used to produce three-atom or four-atom W state in Ref. [29].

2. *Experiment with trapped ions*

Three qubit W and GHZ states of trapped ions have been generated experimentally by Roos et all [5] and conditional operations for readout of an individual qubit have been implemented.
In this experiment qubits are encoded in the ground and metastable states D and S of the $^{40}Ca^+$ ion. A laser pulse can rotate each ion

$$R(\theta,\phi) = \exp[i\theta/2(e^{i\phi}\sigma^+ + e^{-i\phi}\sigma^-)], \tag{28}$$

that results in transitions between levels D and S, where $\sigma^+ = |S\rangle\langle D|$. By this way the $\pi/2$ pulse, for which $R(\pi/2,0)$, creates a superposition $1/\sqrt{2}(|S\rangle + i|D\rangle)$, if initially ion is in S state. When ions are trapped in a linear Pauli trap each of them can interact with vibrational mode due from motion

$$R^+(\theta,\phi) = \exp[i\theta/2(e^{i\phi}\sigma^+ b^\dagger + e^{-i\phi}\sigma^- b)], \tag{29}$$

where $b, b^\dagger$ are photon operators of the mode. Both operations R and R^+ were implemented experimentally. Using them one can entangle ions with vibrational mode, rotate each ion, map the state of modes into ions and other. As result from the initial state of the trapped ions $|SSS\rangle$ the desired entanglement can be prepared.
Indeed evolution given by R and $R^\dagger$ has the same form, when only one photon of vibrational mode is involved. Let $|0\rangle = |S\rangle$ or $|S\rangle \otimes |1\rangle_b$ and $|1\rangle = |D\rangle$ or $|D\rangle \otimes |0\rangle_b$, then one finds

$$R, R^\dagger: \quad \alpha|0\rangle + \beta|1\rangle \to (\alpha|0\rangle + \beta|1\rangle)\cos\theta/2 + i(\alpha e^{-i\phi}|1\rangle + \beta e^{i\phi}|0\rangle)\sin\theta/2, \tag{30}$$

where $|\alpha|^2 + |\beta|^2 = 1$.
To generate W state it needs a sequence of 5 laser pulses addressed to ion 2, 3 and 1

$$R_2^+(2\arccos(1/\sqrt{3}),0)R_3(\pi,\pi)R_3^+(\pi/2,\pi)R_1(\pi,0)R_1^+(\pi,\pi),$$

where first $R_2^+(2\arccos(1/\sqrt{3}),0)$ is a beamsplitter-like pulse on ion 2, which entangles its state with the vibrational mode generating a non-symmetric superposition $1/\sqrt{3}(|SSS\rangle|0\rangle_b + i\sqrt{2}|SDS\rangle|1\rangle_b)$. Next pulses result in the W state of ions $1/\sqrt{3}(|DDS\rangle + |DSD\rangle + |SDD\rangle)$. In this experiment for reconstruction of density matrix the state tomography has been used, and fidelity of 83% was observed.
The $^{40}Ca^+$ ion has an additional Zeeman level D' so that laser pulse on $S - D'$ transition can map the state $|S\rangle \to |D'\rangle$ and back. The mapping allows readout individual ion from the quantum ion trapped register while preserving coherence. In the experiment with three-partite entanglement the states of two ions were mapped into $S - D'$ space. After reading the remainder ion, the laser pulses remap the states into original space preserving coherence.
The presented technics allows generating and manipulating entanglement and are promising for quantum computing.

B. Optical schemes for light

1. *States of light and structure of the schemes*

For quantum state engineering the optical implementation of the W states is attractive because of set of simple resources can be used. Light is usually presented by its modes, which are specified by its wave vectors $\mathbf{k}$ or "which path", polarization, say horizontally H and vertically V, and occupation number. So $|2H\rangle_{\mathbf{k}}$ is a H-polarized mode with wave vector $\mathbf{k}$ and occupation number 2, but for shortness they often say about two H photons, that pass along

k direction or belong to the same space mode. In proposals and experiments two types of multimode states are discussed. First of them has one photon distributed into n modes

$$W_n(1) = 1/\sqrt{n}(|1\ldots 00\rangle + \ldots |0\ldots 01\rangle), \tag{31}$$

and second known as polarized W state reads

$$W_n(V) = 1/\sqrt{n}(|V\ldots HH\rangle + \ldots |H\ldots HV\rangle). \tag{32}$$

The presented definitions are directly generalized to $\eta_n(1)$ and $\eta_n(V)$.
From point of the view of QIT, that considers logical qubits, both states (31) and (32) are equivalent up to labelling $0 \leftrightarrow H, 1 \leftrightarrow V$, therefore they have the same entropy, degree of entanglement and so on. Also statistics of light in these states are similar. For $W_n(1)$ one finds the next correlation functions

$$\begin{aligned} \langle a_k \rangle = \langle a_k a_m \rangle = 0, \\ \langle a_k^\dagger a_m \rangle = \langle a_k^\dagger a_k a_m^\dagger a_m \rangle = 1/n. \end{aligned} \tag{33}$$

It follows, that each of the modes has subpoissonian statistics of photons with the Mandel parameter $\xi = -1/n$. In modes the photons are anti-correlated because the coincident rate of the photon counting $\langle a_k^\dagger a_k a_m^\dagger a_m \rangle$ is less then product $\langle a_k^\dagger a_k \rangle \langle a_m^\dagger a_m \rangle$. All these properties are true for $W_n(V)$.
There is a difference between these states. Indeed all current proposals based on the linear lossless optical elements permit only conditional preparation of $W_n(V)$ in contrast to $W_n(1)$.
Considering the optical schemes proposed for generation of the W states, one finds a similar structure of them. Their main resources are linear optical elements U, sources of light S and photon detectors D. A set of the linear elements is presented mainly by beamsplitters (BS), polarized beamsplitters (PBS), half- and quarter-wave plates (HWP, QWP), and others. These devices are passive, conserve the number of photons and can be described by an unitary transformation U. One of the most popular sources of light is the type-I and the type-II parametric down convertor (PDC) in the threshold regime known as spontaneous parametric source (SPDC), also the single-photon source (SPS) is often discussed. For several experimental proposals it requires commercial photon detectors, which can't resolve the photon number of detection. So that these elements are seem to be feasible by current technologies.
Each scheme has two partitions at last. First splits the photons of sources by linear optical elements into the output photons O and the working photons M:

$$S \rightarrow U_s \rightarrow [O - M]. \tag{34}$$

In the second partition after some unitary transformations all M photons come to detectors and O photons leave the schemes:

$$\leftarrow U_O \leftarrow [O - M] \rightarrow U_M \rightarrow D. \tag{35}$$

The key idea is simple. A given set of linear optical elements entangles photons of the source and distributes them so that their superposition contains a desired state of O photons. It is extracted with a probability by a projection measurement on M photons. The probability of the successful outcome depends on the resources used and is one of the main characteristic of these schemes.

2. *Experimental proposals*

The above abstract arguments can be found by examining several experimental schemes proposed.
First note, that a scheme for W state using third order nonlinearity for path entangled photons has been introduced by Zeilinger et al. [30].
In the scheme for the generation of $W_4(V)$ introduced by Mathis et al. [31] the presented setup consists of the type-II PDC and two $SPS's$ as input modes. With the help of the post-selection strategy developed for GHZ [32] the $W_4(V)$ state can be achieved with probability 2/27 also $W_3(V)$ can be done.
An example of preparation of $W_n(1)$ with probability 1 and $W_3(V), W_4(V)$ is given by Tomita et al. [33]. The main resources are a set of n single-photon sources and a lossless $n \times n$ multiport fiber beamsplitter. If one photon enters the input of the multiport beamsplitter the output state is $\eta_n(1)$ or particular $W_n(1)$ for symmetric configuration because of one photon is distributed with n output modes

$$U_n : \quad |10\ldots 0\rangle \rightarrow W_n(1). \tag{36}$$

This method is generalized to $W_n(V)$ but only conditional schemes can be achieved. One of the reasons of it is that already two input photons are transformed by a beamsplitter into three states $a|11\rangle + b|20\rangle + c|02\rangle$, however two of them $|20\rangle, |02\rangle$ are often unwanted. Then it needs a post-selection. Let three photons H, H, and V enter the input of a tritter U_3 at the same time, then

$$U_3: \quad |1H\rangle_1|1H\rangle_2|1V\rangle_3 \to aW_3(V) + \dots. \tag{37}$$

If we select outcome in which there is only one photon in each output then the polarized $W_3(V)$ states are obtained with probability 1/9. The found setup results in $W_4(V)$ with probability 1/16, which is larger, than 2/27 of Ref. [31] Two schemes for $W_3(V)$ with type-II PDC and a set of SPS's is discussed by Yamomoto et al. [34]. In the first scheme beamsplitters transform the four photon states of PDC into a superposition of the form

$$|2H\rangle_{\mathbf{k}}|2V\rangle_{\mathbf{k}} \to \alpha|1V\rangle_{\mathbf{k}}W_3(V) + |1H\rangle_{\mathbf{k}}W_3(H) \tag{38}$$

Then after a projection measurement on the working photon in $\mathbf{k}$ mode the $W_3(V)$ or $W_3(H)$ is prepared with maximal probability 3/32. The second scheme includes three SPS's and is similar to (37).
Using schemes proposed by Kobayashi et al. in ref. [35] the $W_4(V)$, GHZ and ZSA states are generated. The experimental setup includes type-I and type-II PDC. In the first scheme the state of sources is transformed by a tritter

$$(|1H\rangle_a|1V\rangle_b + |1V\rangle_a|1H\rangle_b)|2H\rangle_c \to aW_4(V) + \dots. \tag{39}$$

and projects onto a single photon state. By this way $W_3(V)$ can be done with probability 0.0165. In this scheme the type-I PDC can be replaced by laser beam, from which the Fock state $|mH\rangle$ originates. In the second scheme the initial state involved two photons from each PDC $|4H\rangle_a|0\rangle_b + |2H\rangle_a|1H1V\rangle_b + |0\rangle_a|2H2V\rangle_b$ are transformed into $W_4(V)$ or to ZSA state. Indeed, in these schemes all photons are working and are detected.
Type-I PDC of a two-crystal geometry is proposed by Kobayashi for generation of four-photon entanglement [36]. The scheme presented at fig. 1. The source produces the four-photon state $a|4H\rangle + b|4V\rangle + c|2H2V\rangle$. Experimental

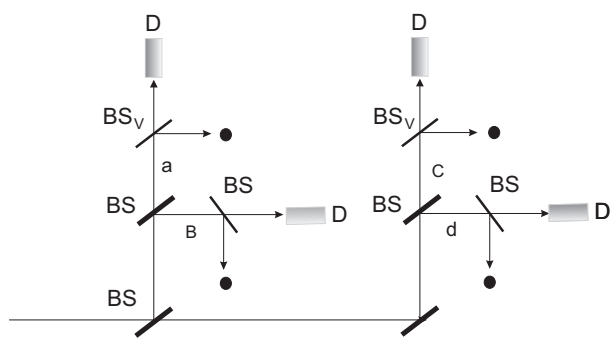

FIG. 1: Scheme for generation of $W_4(V)$ using four-photon states $\alpha|4H\rangle + \beta|4V\rangle + \gamma|2H2V\rangle$ of Type-I PDC of a two-crystal geometry

setup includes beamsplitters, that transform the state of source into entangled $aW_4(H) + bW_4(V)$ at a, b, c and d outputs. To extract $W_4(V)$ there is a set of beamsplittes BS_v, which have a small transparency for V photons. By this way the obtained state of the transmitted and reflected photons reads $W_4(H)$ and $W_4(V)$ and is achieved by projective measurement. Consider efficiency of these scheme. It can be calculated assuming, that the probability of generation a photon pair is about $\nu = 4 \times 10^{-4}$ per pulse. Probability of the four-photon events the probability has order of $\nu^2 = 8 \cdot 10^{-8}$. For a pump laser with a 100-MHz repetition rate the generation rate of $W_4(V)$ is about 10^{-1} per second and with the 50% detection efficiency one finds 1 desired state per minute.

C. Experiments

The recent experiments for generating multiphoton entanglement are based on PDC and linear optics elements manipulating polarized light.
Weinfurter et al have proposed a type-II PDC [37] that has been used as a source in many experiments. Its state is a

superposition of the four-photon GHZ and the tensor product of two maximally entangled EPR pairs, emitted into the two spatial modes

$$\Psi^{(4)} = \sqrt{2/3}|GHZ\rangle - \sqrt{1/3}|EPR\rangle|EPR\rangle. \tag{40}$$

Here $|EPR\rangle = (|H\rangle_a|V\rangle_b + |V\rangle_a|H\rangle_b)/\sqrt{2}$, and GHZ has two indistinguishable photons of the same polarization into one space mode : $|GHZ\rangle = (|2H\rangle_a|2H\rangle_b + |2V\rangle_a|2V\rangle_b)/\sqrt{2}$. This is not a product of two entangled pairs. If each of two modes splits at a beamsplitters, correlations between four photons can be observed [38]. However it needs to select events such that one photon is detected in each of the four modes. Two types of coincidence due from GHZ and EPR state between 300 and 100 per hour for integration time of 5 and 17.5 h. have been observed. By this way the Bell inequality for four qubits has been tested.
Using the source generated $\Psi^{(4)}$, Weinfurter et al [39] have generated the $W_3(V)$ state and examined its entanglement. The experimental setup is given at fig. 2. Four photons in the $\Psi^{(4)}$ state are distributed into four modes t, a, b, and

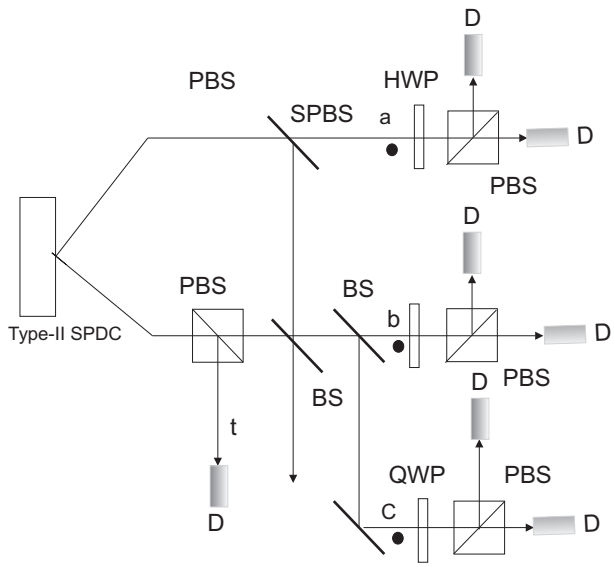

FIG. 2: Experimental setup to generate $W_3(V)$ by the SPDS source state of $\Psi^{(4)} = \sqrt{2/3}|GHZ\rangle - \sqrt{1/3}|EPR\rangle|EPR\rangle$

c. By detection a photon in each of the arms the $W_3(V)$ entanglement in a, b, c modes is prepared. In experiment several characteristics have been tested to verify the observed state. First is the coherence arisen from of the wave function. The reason is that the desired state is produced by independent measurements of the modes and coincidence photocurrents are examined. However by this way coherence of the wave function can't be detected and both the pure state and mixed one can't be distinguished. Second is the robustness of the W. In experiment it has been tested by performing an one-mode measurement, that projects a mode in to H or V state. It needs two measurements of the such type to destroy entanglement. So that after projecting in $|H\rangle_a$ an EPR pair of the form $1/\sqrt{2}(|HV\rangle + |VH\rangle)_{bc}$ has been observed. Also the generalized Mermin inequalities [40] has been examined. However Cereceda has pointed out, that these inequalities can't verify the tripartite entanglement [41]
A problem of detection of genuine multiparticle entanglement of $W_3(V)$ and $\Psi^{(4)}$ has been studied experimentally by H. Weinfurter et al. [23]. A set of witness operators has been measured for W and $\Psi^{(4)}$ using a set of polarization analyzers which consist of QWP, HWP and PBS. One of the witness for W is given by (26), where the spin observable σ_z corresponds to measurement of H, V linear polarization, σ_x, σ_y corresponds to analysis of $\pm 45^0$ linear polarization (left-right circular polarization). By this way the genuine W entanglement has been demonstrated. Indeed for four -photon state, 15 different analyzer settings are required.
Several quantum informational tasks can be done using the four-photon state $\Psi^{(4)}$. Weifurter et al. [20] have demonstrated preparation of decoherence-free states which enable to encode a qubit in decoherence-free space. The scheme is presented at fig. 3. In experiment two DF states of the form (19) and (20) were generated from $\Psi^{(4)}$ and sent into noisy channel. The channel is presented by inserting QWP and HWP in each modes. The invariance of the encoded information has been observed by comparing the density matrix before and after the interaction with environment.

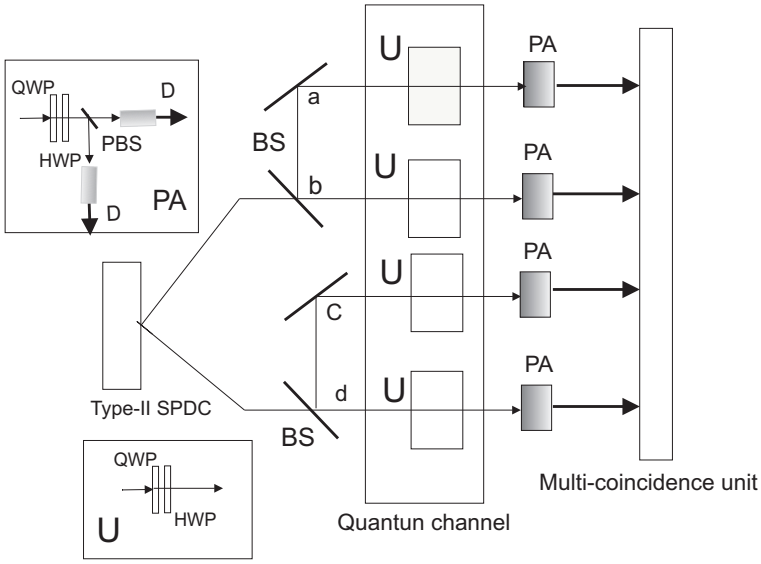

FIG. 3: Experimental setup for decoherence-free communication. The photons of the source are distributed into four mode a,b,c,d. The noisy channel is presented by quarter- (QWP) and half wave plates (HWP). Polarization analyzers (PA) are employed for the registration of the decoherence-free states.

IV. APPLICATIONS

Some information tasks need entanglement so that there is a question whether MES of the W-class can be used. It has been found that some of these states are suitable for the problem of secrete sharing and key destribution [42], teleportation [43] and dense coding also the distillation protocols [44], [45] have been proposed.

A. Quantum key distribution and secrete sharing

Key distribution and secrete sharing are problems of classical cryptography and can be implemented using quantum resources, particularly W state and projective measurements. Let three parties Alice, Bob and Claire share the W state given by (2) and perform randomly measurement of σ_x and σ_z on his own particle. The key idea of using W state is that after projecting onto $|0\rangle_A$ Bob and Claire have in their hands entanglement $(|01\rangle + |10\rangle)/\sqrt{2}$ and the subsequent outcomes of their measurements will be correlated. In contrast after projecting onto $|1\rangle_A$ they have a product $|00\rangle$ and the independent outcomes aries. This is a basis of quantum key distribution (QKD) because two correlated outcomes represent a key bit in the Bob and Claire hands. Quantum secrete sharing (QSS) is a QKD among n persons in such a way that one's key message can be retrieved by the $k \leq n$ persons if they cooperate all together.
In more detail. To describe the measurement of σ_x and σ_z introduce their eigenvectors

$$\sigma_x|x_\pm\rangle = x_\pm|x_\pm\rangle, \quad \sigma_z|z_\pm\rangle = z_\pm|z_\pm\rangle, \tag{41}$$

where $|x_\pm\rangle = (|0\rangle \pm |1\rangle)/\sqrt{2}, |z_\pm\rangle = |0\rangle, |1\rangle$, and $x_\pm, z_\pm = \pm 1$ are eigenvalues or outcomes of the measurement. In the case of projecting, for example, into $|z_+\rangle$ outcome of the measurement is z_+. Using these notations W state can be written in the form

$$W = (1/\sqrt{3})[|z_+z_-z_-\rangle + |z_-z_+z_-\rangle|z_-z_-z_+\rangle]$$
$$= (1/\sqrt{3})|z_+\rangle[|x_+x_+\rangle - |x_-x_-\rangle] + (1/2\sqrt{3})|z_-\rangle[|x_+x_+\rangle + |x_+x_-\rangle + |x_-x_+\rangle + |x_-x_-\rangle]. \tag{42}$$

When Alice has outcome z_+ then Bob and Claire obtain the same outcome x_+ or x_- which is a key bit. The success probability in distributing a key bit is 2/3 . The case when Alice has outcome z_- is useless and discarded. Note, the difference in correlation between two states $\Psi^+ = (|01\rangle + |10\rangle)/\sqrt{2}$ and $|00\rangle$ in the Bob and Claire hands. It is presented here by the number of outcomes, which are x_+x_+; x_-x_- for Ψ^+ and x_+x_+; x_+x_-; x_-x_+; x_-x_- for $|00\rangle$. So any correlation may reduce the total number of outcomes. The protocol requires 12 qubits per a key bit at average.

On the other hand the protocol E91 (based on Bell's theorem and EPR pairs as a quantum channel) has the overall success probability 2/9 and it requires 9 qubits per bit.
In QSS Bob and Claire are expected to retrieve message from Alice in their cooperation. If Alice has outcome z_+ then Bob and Claire have opposite outcomes out of z_+ and z_-. Otherwise both have the same outcome z_+. When Bob and Claire cooperate they can collect their outcomes to correctly deduct the key bit of A. The overall success probability is 1/8 which is determined by the probability of the choosing measurements. Due to this argument 24 qubits are necessary to share a key bit. It has been shown that these protocols are secure against simple individual attacks by an eavesdropper. These attacks are such that Eve performs an unitary operation on a composite system of her auxiliary qubit and one of the three qubits which are involved in a secure communication and she tries to extract some information by measuring her auxiliary qubit [46].

B. Distillation of W

When an entangled state is transmitted its quantum correlations can be destroyed because of noise. To achieve a faithful transmission Bennet at all have proposed purification of the state using LOCC [47]. It can be done using a set of the Pauli and CNOT operations. In [45] a protocol for distillation of the form

$$a|100\rangle + b|010\rangle + c|001\rangle \rightarrow (1/\sqrt{3})(|100\rangle + |010\rangle + |001\rangle) \tag{43}$$

has been proposed. It includes two points: 1/ unitary transformations $U_k, k = 1, 2$ on W and ancilla qubit

$$U_k = \begin{pmatrix} 1 & 0 & 0 & 0 \\ 0 & v_k & 0 & \sqrt{1-v_k^2} \\ 0 & 0 & -1 & 0 \\ 0 & \sqrt{1-v_k^2} & 0 & -v_k \end{pmatrix}, \tag{44}$$

where $v_1 = c/a$ and $v_2 = c/b$, 2/ a measurement on ancilla. The successful probability is $3c^2$. This protocol can be simulated in cavity QED.

C. Teleportation and Dense coding using W-channel

Quantum teleportation, that allows transmitting an unknown states, is attractive for communications also for computing as primitive for quantum computations [48]. The protocol has been demonstrated experimentally for teleportation of polarized photon [49], coherent state of light [50] and atom [51]. In the standard protocol an unknown qubit state

$$\varphi = \alpha|0\rangle + \beta|1\rangle \tag{45}$$

can be transmitted using an EPR pair as a quantum channel, 2 bits of classical information gained in the Bell-state measurement and Pauli matrixes, which are retrieval operators.
Instead of EPR pair Karlsson et al. [52] have considered the tree-particle GHZ entanglement for sending unknown qubit to two receivers. It can be done probabilistically because of the non-cloning theorem, which forbids copying of an unknown states by linear unitary transformations [53]. However one of the receivers can retrieve unknown state if he'll cooperates with other receiver.
Can the W states be suitable for teleportation as a quantum channel? In a large number of the presented protocols the task of transmitting unknown qubit is accomplished probabilistically only [54], [43]. Nevertheless there is an unconditional protocol for teleportation of entangled state

$$\phi = \alpha|01\rangle + \beta|10\rangle \tag{46}$$

which has been proposed in our Ref. [55]. It based on the observable, that two entangled qubits can be transmitted perfectly in the GHZ-channel by 3 bits of classical information if a Bell-like state measurement [56] is performed

$$\phi_{12} \otimes |GHZ\rangle_{ABC} = (1/\sqrt{8}) \sum_x |\Phi_x\rangle_{12A}[B_x \otimes C_x]\phi_{BC}, \tag{47}$$

where each of the eight vectors Φ_x is a product of the Bell state and eigenvector of σ_x, the retrieval operators B, C are defined by Pauli matrixes. This equation tells, that if the GHZ channel allows teleportation of a state ϕ, then

this state can be teleported using any channel, obtained from the GHZ one by unitary transformation, that involves all particles of the channel except one.
The required two-particle transformation reads

$$V = |\Psi^+\rangle\langle 00| + |11\rangle\langle 01| + |\Psi^-\rangle\langle 10| + |00\rangle\langle 11|. \tag{48}$$

It is a non-local unitary operation, that convert GHZ into a state from the W class

$$(1 \otimes V)|GHZ\rangle_{ABC} = (1/\sqrt{2})|100\rangle + (1/2)|010\rangle + (1/2)|001\rangle. \tag{49}$$

By applying this transformation to both sides of (47) we have teleportation of entangled state by the channel of the W class. There is new feature of the recovering operators which become non-local. The obtained W channel can accomplish tree-qubit dense coding, when three bit of classical information can be send by manipulating two qubits [57], [58].

V. CONCLUSIONS

Considering MES of the W-class we find interesting properties, proposals of their implementations and experimental realizations. They can be used for teleportation and dense coding also in quantum quantum cryptography for key distribution, secrete sharing and others. One of the important features of these states, that follows from their entanglement, is robustness, which distinguishes them from another states. So it has been shown that they have immunity to decoherence being decoherence-free states. However exploiting of this properties is not easy problem and we think that one of the main open questions is how to use fully the potential of MES from the W class.

Acknowledgments

We are grateful to A.M. Basharov for hopeful discussion. This work was supported in part by the Delzell Foundation Inc.

[1] K. Mattle, H. Weinfurter, P.G. Kwiat, and A. Zeilenger. Phys.Rev.Lett., **76**, 4656-4659 (1996).
D.S. Naik, C.G. Peterson, A.G. White, A.J. Berglund, and P.G. Kwiat. Phys.Rev.Lett., **84**, 4733-4736 (2000).
P.G. Kwiat, K. Mattle, H. Weinfurter, A. Zeilinger, A.V. Sergienko, Y.H. Shih. Phys.Rev.Lett., **75**, 4337-4341 (1995).
P.G. Kwiat, E. Waks, A.G. White, I. Appelbaum, and P.H. Eberhard. Phys.Rev.A, **60**, R773-R776 (1999).
Y.H. Kim, M.V. Chekhova, S.P. Kulik, M. Rubin, Y.H. Shih. Phys. Rev. A **63**, 062301, (2001).
G. Brida, M. V. Chekhova, M. Genovese, M. Gramegna, L. A. Krivitsky, and S. P. Kulik. Phys. Rev. A 70, 032332 (2004).
Yu. I. Bogdanov, M. V. Chekhova, S. P. Kulik, G. A. Maslennikov, A. A. Zhukov., C. H. Oh, and M. K. Tey. Phys. Rev. Lett. 93, 230503 (2004).
[2] W. Dur, G. Vidal, J.I Cirac. Phys. Rev., A bf62, 062314, (2000)
[3] B. Julsgaard, A. Kozhekin, E.S. Polzik. Nature, **413**, 400, (2001)
[4] M.Bourennane, M. Eibl, C. Kurtsiefer, H. Weinfurter, O. Guehne, P. Hyllus, D. Bruss, M. Lewenstein, A. Sanpera. Phys. Rev. Lett., **92**, 087902 (2004)
[5] C.F. Roos, M. Riebe, H. Häffner, W.Hänsel, J.Benhelm, G. P.T. Lancaster, C. Becher, F.Schmidt-Kaler, R. Blatt. Scince, **304**, 1478, (2004).
[6] R. Dicke. Phys. Rev, **93**, 99 (1954)
[7] C.H. Bennett, G. Brasard, C. Crepeau, R. Jozsa, A. Peres, W.K. Wootters. Phys. Rev. Lett., **70**, 1895 (1993)
[8] A. Karlsson, M.Bourennane, I.Ghiu, D. Ljunggren, A. Manson. Quantum Computers and Computing, **4**, 3 (2003)
[9] C.H. Bennett, H.J. Bernstein, S. Popescu, B. Shumacher. E-print, LANL, quant-ph/9511030 (1995).
[10] D. M.Greenberger, M. Horne, A. Zeilinger. Bell's theorem, Quantum Theory and Conceptions of the Universe, ed. M. Kafatos, Kluwer, Dordrecht , 1989, p.69.
D. Bouwmeester, J.-W. Pan, M. Daniell, H.Weinfurter, A.Zeilinger Phys. Rev. Lett., **82**, 1345 (1999).
[11] R.F. Werner. Phys. Rev., A **40**, 4277 (1989).
[12] A. Peres. Phys. Rev. Lett., **77**, 1413 (1996).
[13] M. Horodecki, P. Horodecki, R. Horodecki. Phys. Lett. A, **223**, 1 (1996).
[14] A.K. Pati. J. Physics, **59**, 217 (2002).
[15] P. Zanardi, M. Rasetti. Phys. Rev. Lett., **78**, 3306 (1997).

[16] A.M. Basharov, JETP Lett 75, N3,123 (2002)
A.M.Basharov and E.A.Manykin, Optics and Spectroscopy, 96, N1, 81 (2004).
[17] G.M. Palma, K. Suominen, A.K. Ekert. Proc. R. Soc. London, Ser. A, **452**, 567 (1996).
L.-M. Duan, G.-C. Guo. Phys. Rev. Lett., **79**, 1953 (1997).
[18] D.A. Lidar, I.L. Chuang, K.B. Whaley. Phys. Rev. Lett., **81**, 2594 (1998).
D.A. Lidar, D. Bacon, J. Kempe, K. B. Whaley. Phys. Rev. A, **61**, 052307 (2000)
[19] J. Kempe, D. Bacon, D.A. Lidar, K. B. Whaley. Phys. Rev. A, **63**, 042307 (2001).
[20] M. Bourennane, M. Eibl, S. Gaertner, C. Kurtsiefer, A. Cabello, H. Weifurter. Phys. Rev. Lett., **92**, 107901 (2004).
[21] H.J. Briegel, R.Raussendorf. Phys. Rev. Lett., **86**, 910, (2001).
[22] B.M. Terhal. Phys. Lett. A, **271**, 319 (2000).
M. Lewenstein, B. Kraus, J. I. Cirac, P. Horodecki. Phys. Rev. A, **62**, 052310 (2000).
D. Brub, J. I. Cirac, P. Horodecki, F. Hulpke, B. Kraus, M. Lewenstein, A.Sanpera. J. Mod. Opt., **49**, 1399 (2002).
[23] M.Bourennane, M. Eibl, C. Kurtsiefer, H. Weinfurter, O. Guehne, P. Hyllus, D. Bruss, M. Lewenstein, A. Sanpera. Phys. Rev. Lett. **92**, 087902 (2004).
[24] V.N. Gorbachev, A.I. Zhiliba, A.A.Rodichkina, A.I.Trubilko. Phys. Lett. A, **323**, 339 (2004).
[25] A.Biswas, G. S. Agarwal. J. Mod. Opt., **51**, 1627 (2004).
[26] Z.-L. Cao, M. Yang. Int. Journal of Quantum Information, **2**, 231 (2004).
[27] Y.-F. Xiao, Z.-F. Han, J. Gao, G.-C. Guo. E-print, LANL, quant-ph/0412202 (2004).
P. Xue, G.-C. Guo. Phys. Rev. A, **67**, 034302 (2003).
[28] V.N.Gorbachev, A.I. Trubilko, A.A. Rodichkina, A.I. Zhiliba. Phys. Lett. A, **310**, 339, (2003).
[29] X. Wang. Phys. Rev. A, **64**, 012313 (2001).
[30] A. Zeilinger, M. A. Horne, D. M. Greenberger. NASA Conf. Publ. No. 3135 (National Aeronautics and Space Adminstration), Code NTT, Washington DC, 1992, p.73.
[31] XuBo Zou, K. Pahlke, W. Mathis. E-print, LANL, quant-ph 0202090, (2002).
[32] J.-W. Pan, D. Bouwmeester, M. Danlell, H. Weinfurter , A. Zeilinger. Nature, **403**, 515 (2000).
[33] B.-S. Shi, A. Tomita. E-print, LANL, quant-ph 0208170 (2002).
[34] T. Yamamoto, K. Tamaki, M. Koashi, N. Imoto. Phys. Rev. A, **66**, 064301 (2002).
[35] H. Mikami, Y. Li, T. Kobayashi. Phys. Rev. A, **70**, 052308 (2004).
[36] Y. Li, T. Kobayashi. Phys. Rev. A, **69**, R020302 (2004).
Y. Li, T. Kobayashi. Phys. Rev. A, **70**, 014301 (2004).
[37] H. Weinfurter, M. Zukowski. Phys. Rev. A, **64**, 010102 (2001).
[38] M.Eibl, S. Gaertner, M. Bourennane, Ch. Kurtsiefer, M. Zukowski, H. Weinfurter. E-print, LANL, quant-ph/0302042 (2003).
[39] M. Eibl, N. Kiesel, M. Bourennane, C. Kurtsiefer, H.Weinfurter. Phys. Rev. Lett., **92**, 077901 (2004).
[40] N. D. Mermin. Phys. Today, **43**, 9 (1990).
[41] J.L. Cereceda. E-print, LANL, quant-ph/0402198 (2004).
[42] J. Joo, J. Lee, J. Jang, Y.-J. Park. E-print, LANL, quant-ph/0204003 (2002).
[43] J. Joo, Y.-J. Park, S. Oh, J. Kim. New Journal of Physics, **5**, 136, (2003)
Z.-L. Cao, W. Song. E-print, LANL, quant-ph/0401054 (2004).
[44] Z.-L. Cao, M. Yang. J. of Physics B: Atomic, Molecular and Optical Physics, **36**, 4245, (2003).
[45] Z.-L. Cao, M. Yang. Physica A, **337**, 141-148 (2004).
[46] N. Gisin, G. Ribordy, W. Tittel, H. Zbinden. Rev. Mod. Phys., **74**, 145 (2002)
[47] C. H. Bennett, G. Brassard, S. Popescu, B. Schumacher, J. A. Smoin, W. K. Wootters. Phys. Rev. Lett., **76**, 722 (1996).
[48] D. Gottesman, I.Chuang. Nature, **402**, 390 (1999).
[49] D.Bouwmeester, J.W.Pan, M.Mattle, M.Eible, H.Weinfurter, A.Zeilinger. Nature, **390**, 575 (1997).
D. Boschi, S.Branca, F. de Martini, L.Hardy, S.Popescu. Phys. Rev. Lett., **80**, 1121 (1998).
Y.-H.Kim, S.P.Kulik, Y.Shih. Phys. Rev. Lett., **86**, 1370 (2001).
[50] A. Furusawa, J. L. Sorensen, S. L. Braunstein, C. A.Fuchs, H. J. Kimble, E. S. Polzik. Science, **282**, 706 (1998).
[51] M. Riebe, H. Haffner, C.F. Roos, W. Hansel, J. Benhelm, G.P.T. Lancaster, T.W. Korber, C. Becher, F. Schmidt-Kaler, D.F.V. James, R. Blatt. Nature, **429**, 734 (2004).
M.D.Barrett, J. Chiaverini, T.Schaetz, J.Britton, W.M. Itano, J.D.Jost, E.Knill, C. Langer, D. Leibfrider, R.Ozeri, D.J.Wineland. Nature, **429**, 737 (2004).
A.Danatan, N.Treps, A.Bramati, M.Pinard. Phys. Rev. Lett., **94**, 050502 (2005).
[52] A. Karlsson, M.Bourennane. Phys. Rev. A **58**, 4394 (1998).
[53] W.K.Wotters, W.S.Zurek. Nature, **299**, 802 (1982).
[54] B.-S. Shi, A.Tomita. Phys. Lett. A, **296**, 161 (2002).
J. Joo , Y.-J.Park. Phys. Lett. A, **300**, 324 (2002).
B.-S. Shi, A.Tomita. Phys. Lett. A, **300**, 538-539 (2002).
[55] V.N.Gorbachev, A.I.Trubilko. JETP, **91**, 894 (2000).
[56] L.Marinatto, T.Weber. Found. Phys. Lett., **13**, 119 (2000).
V.N.Gorbachev, A.I.Zhiliba, A.I.Trubilko. J. Opt. B: Quantum Semiclass. Opt. **3**, 825 (2001).
[57] J.L. Cereceda. E-print LANL, quant-ph/ 0105096 (2001).
[58] V.N.Gorbachev, A.I.Trubilko, A.A.Rodichkina. Opt. Spectr., **94**, 706 (2001).
V.N.Gorbachev, A.I.Trubilko, A.A.Rodichkina, A.I.Zhiliba. Phys. Lett. A, **314**, 267 (2003).